DATA STATUS MONITOR

prepared by:

Gyro A. Madrona

Electronics Engineer

GRADING SYSTEM

FINAL GRADE

30%

PRELIM

30%

MIDTERM

40%

ENDTERM

100%

LABORATORY

PENALTY

0

ABSENT

3

45-min LATE

7 max

15-min LATE

TOPIC OUTLINE

Data Status Monitor

- Footprint
- Schematic
- PCB
- Parts List

DATA STATUS MONITOR

FOOTPRINT

Component	Footprint
Light Emitting Diode	LED_red
Resistor 220R,1/4W	RES**1300**-700X250
5V Input	HDR1X**2**
Input	TEST_PT_THT
Capacitor 100uF	CAPPR**500**-1250X2500
Data IN	HDR1X**4**
Decoder	74LS48**N**
7-Segment	SEVEN_SEG_DECIMAL_COM_**K** 7SEG8DIP14**B**

SCHEMATIC DIAGRAM

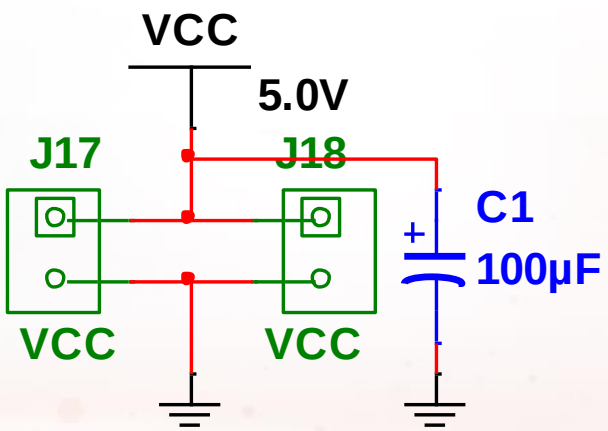

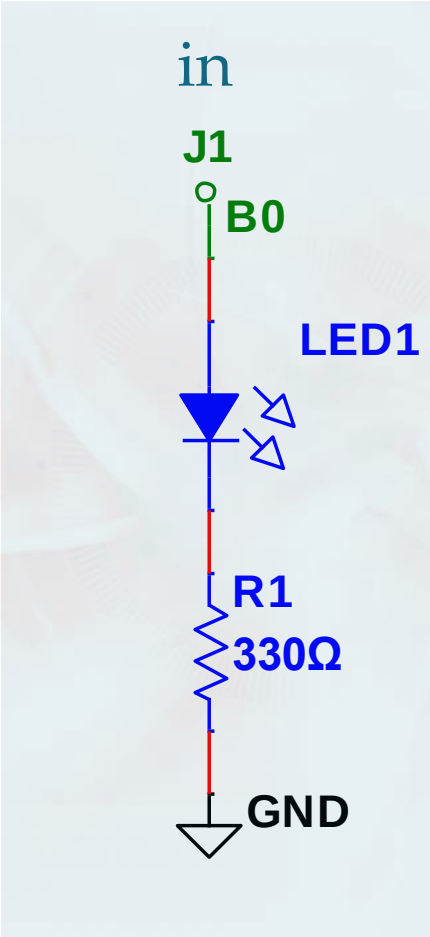

x8

SCHEMATIC DIAGRAM

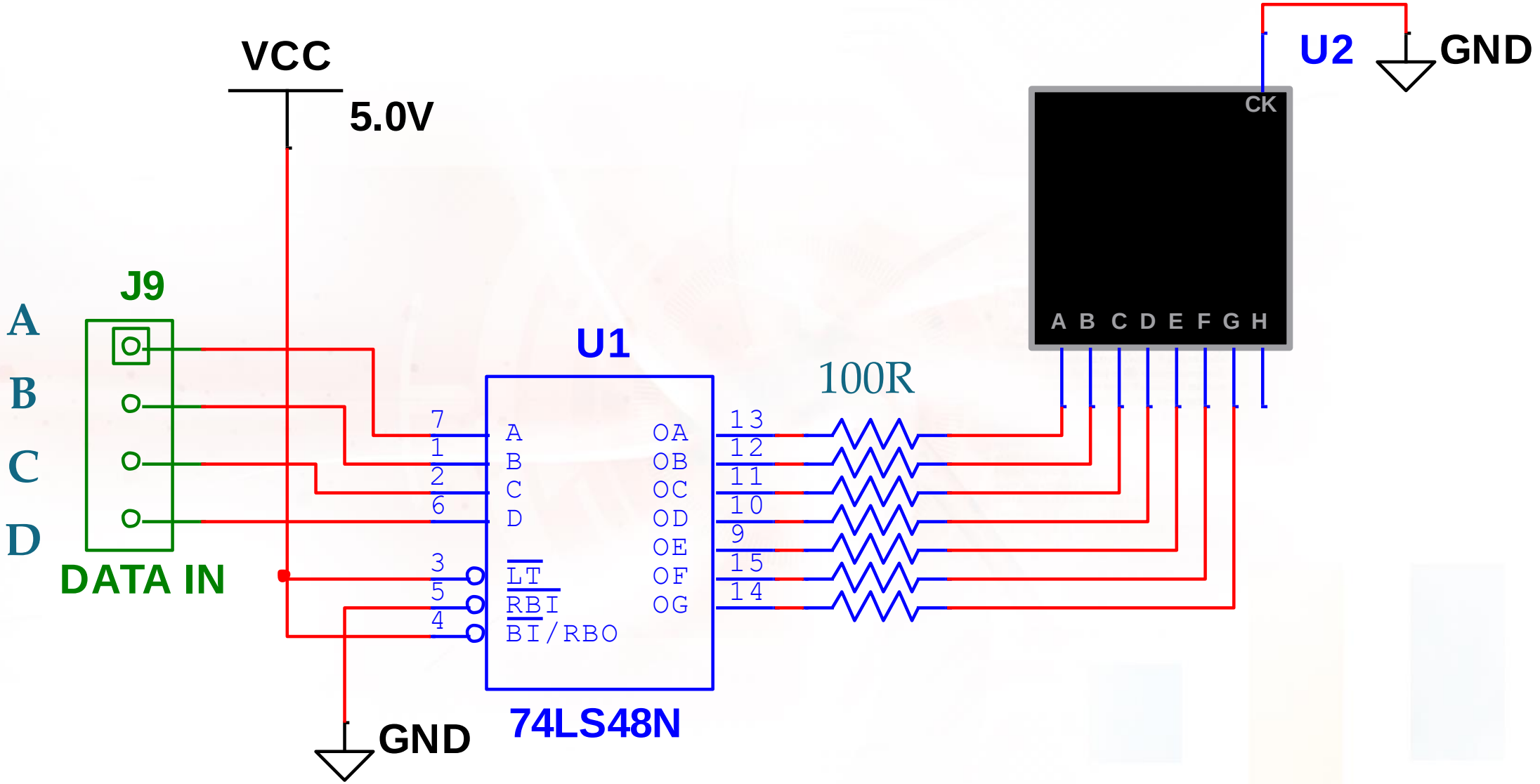

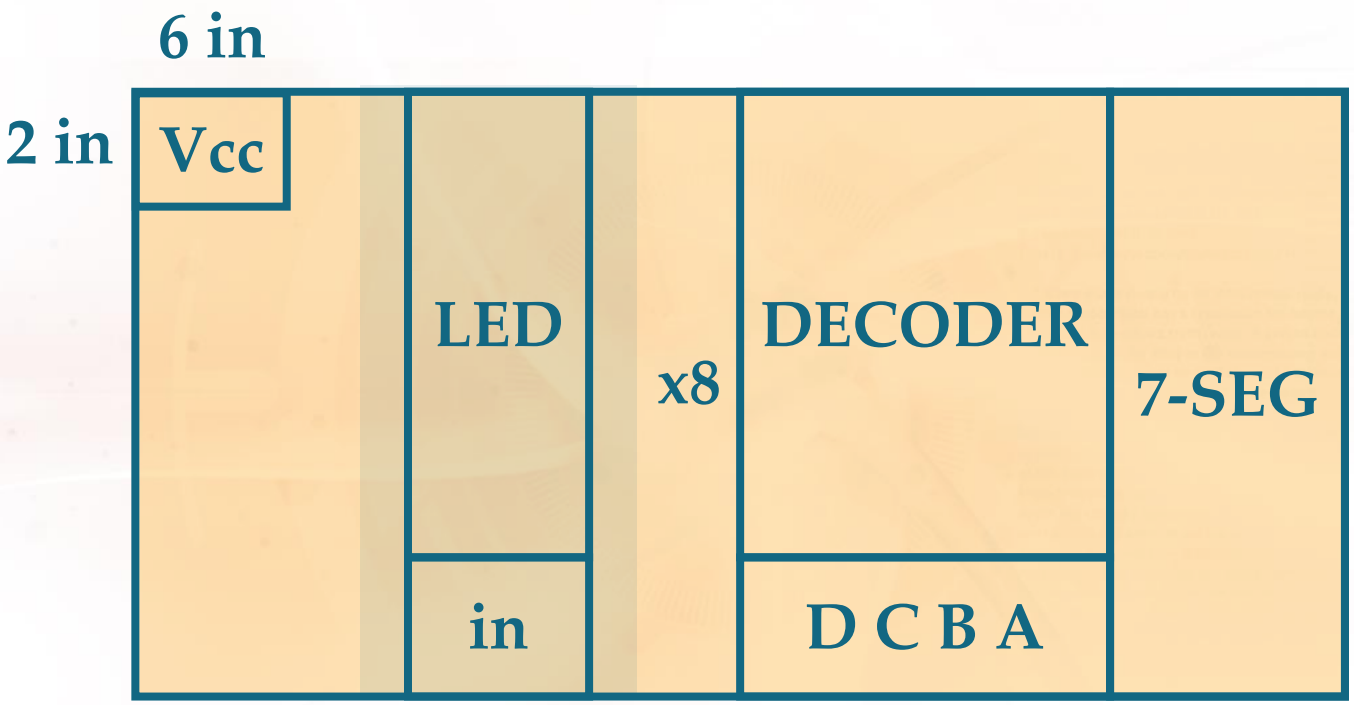

NO Copying of PCB Design!

PARTS LIST

Quantity	Description
8pcs	LED 3V (small)
8pcs	Resistor 220R, 1/4W
7pcs	Resistor 100R, 1/4W
1pc	Decoder 7448 + Socket
1pc	7-Segment Common Cathode
12pcs	Terminal Strip
1pc	Electrolytic Capacitor 100uF/16V
1m	Stranded Wire Red #22AWG
1m	Stranded Wire Black #22AWG
4pcs	Bolts and Nuts + Washer 1” length, 1/8” diameter
4pcs	Spacer

PARTS LIST

Quantity	Description
1bot	Ferric Chloride
1m	Soldering Lead
1pc	Presensitized PCB 6″ x 4″

LABORATORY